ZHAFIR PLASTICS MACHINERY GmbH
Jubatus-Allee 8-10
92263 Ebermannsdorf
Germany
Tel. +49-9438-9412-0
Fax. +49-9438-9412-150
E-Mail: contact@zhafir.com
www.zhafir.com

NINGBO ZHAFIR PLASTICS MACHINERY CO., LTD
No. 98 Guanhai Road, Chunxiao, Beilun, Ningbo, China 315800
Tel. +86-574-86182986
Fax. +86-574-86182977
E-Mail: contact@mail.zhafir.cn
www.zhafir.cn

PREMIER MOULDING MACHINERY
Official UK Sales & Service Partner for Haitian International
Ladymead Business Park, Quainton, Aylesbury, Bucks, HP22 4AN
Sales - 01296 655 555 • Service - 01296 653 037
e-mail: sales@haitian.co.uk
www.haitian.co.uk

Zhafir Partner:

JE 20181217-IV

ZHAFIR
PLASTICS MACHINERY

Zhafir **Jenius** Series

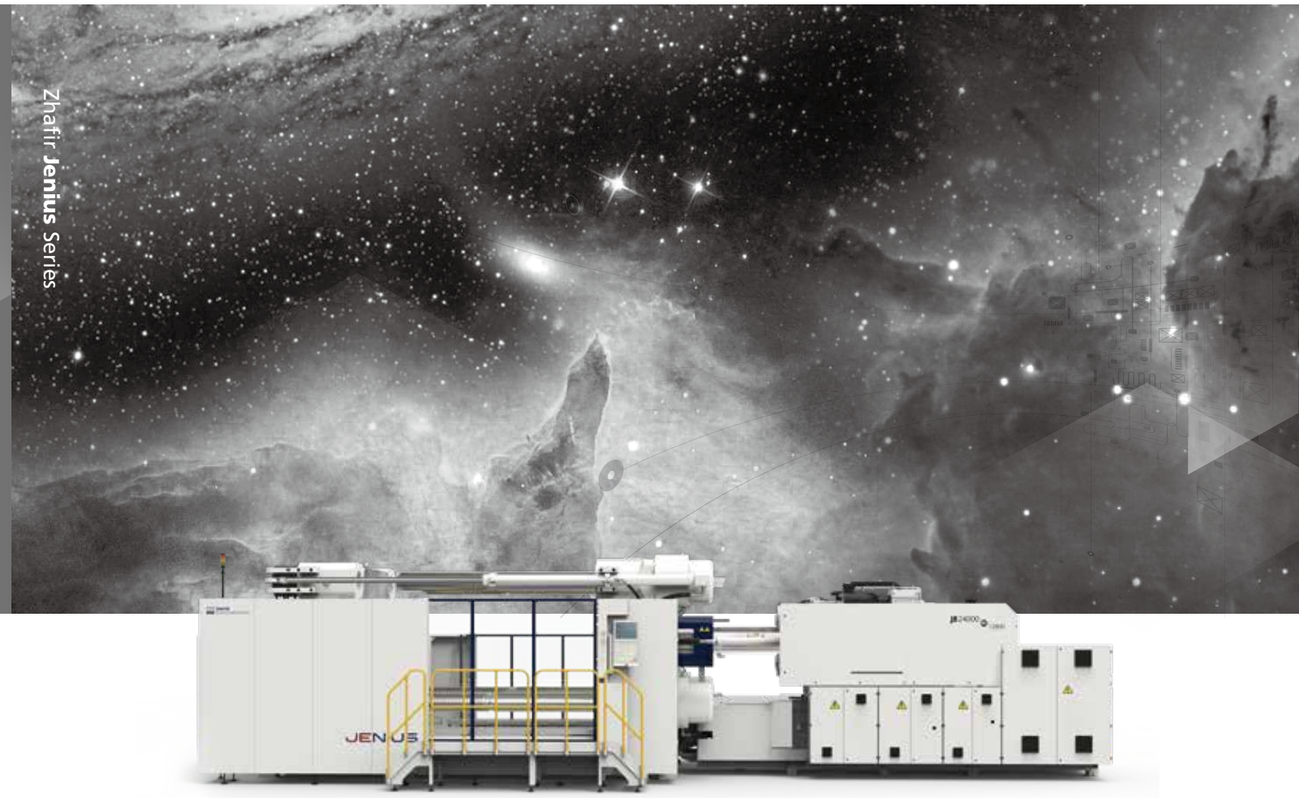

JENIUS

Specifications / International

12.000-33.000kN

A Member of Haitian International

We Extend Advantage.

Technical data **JE12000**

CLAMPING UNIT		JE12000
Clamping force	kN	12000
Space between tie bars	mm	1300×1200
Max. mold height	mm	1250
Min. mold height	mm	600
Ejector stroke	mm	350
Ejector force	kN	230
Max. daylight	mm	2650
Mold opening stroke ①	mm	2050/1400
Max. mold weight ②	t	20
Min. mold dimension	mm	910×840
Mold platen dimension H×V	mm	1860×1760

INJECTION UNIT		3350			5200			7000		
		A	B	C	A	B	C	A	B	C
Screw diameter	mm	75	80	90	80	90	100	90	100	110
Screw L/D ratio	L/D	21.3	20	17.8	24.8	22	19.8	24.4	22	20
Shot size (theoretical)	cm^3	1634	1860	2354	2262	2863	3534	2990	3691	4467
Injection weight (PS)	g	1487	1693	2142	2058	2605	3216	2721	3359	4065
Injection speed	mm/s		160			160			150	
Injection rate	g/s	643	731	926	731	926	1143	868	1072	1297
Injection pressure	MPa	205	180	142	227	180	145	234	190	157
	bar	2050	1800	1420	2270	1800	1450	2340	1900	1570
Holding pressure	MPa	185	162	128	204	162	131	200	162	134
	bar	1850	1620	1280	2040	1620	1310	2000	1620	1340
Screw speed	rpm		185			160			150	
Plasticizing capacity (GPPS) ③	g/s	62	80	100	78	98	120	99	120	145
Plasticizing capacity (HDPE) ④	g/s	93	115	150	116	146	180	147	180	214
Nozzle contact force	kN		94.8			94.8			94.8	
Heating power	kW		45			54.3			75.6	

OTHERS				
Connection power	kW/A	131/220	185/311	205/344
Hopper	kg	none (Options 50)	none (Options 100)	none (Options 100)
Machine dimension	m	11.05×3.36×2.87	11.05×3.36×2.87	11.05×3.36×2.87
Oil tank	l	830	830	830
Machine weight	t	46	49	56

NOTE:
① with min. mold height / with max. mold height
② moving platen: 2/3 of max. mold weight
③ Plasticizing capacity (GPPS): note: GB standard, with application of GPPS plasticizing capacity of 3-zone screws
④ Plasticizing capacity (HDPE): note: Euromap 19, with application of HDPE plasticizing capacity of barrier screws
The above plasticizing capacity is for reference only.

We reserve the right to make changes as a result of further technical advantages.

Machine dimensions

unit: mm

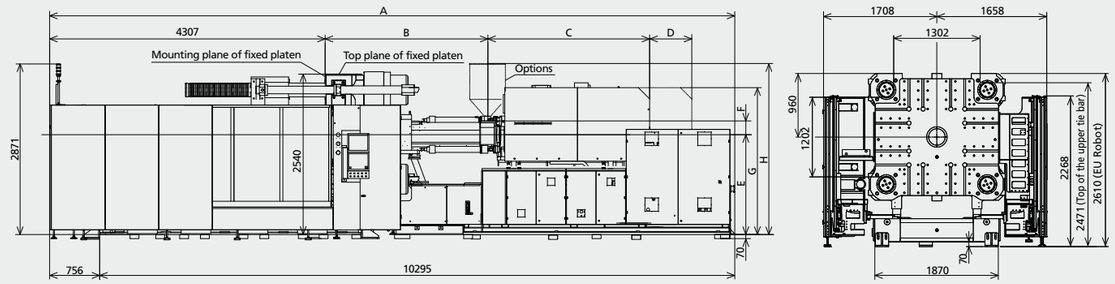

INJECTION UNIT	A	B	C	D	E	F	G	H	I	J	L
7000	11051	2504	2734	710	1580	233	2352	2807	250	Ø6	SR20
5200	11051	2256	2310	710	1580	215	2352	2790	250	Ø4	SR15
3350	11051	1821	2914	600	1580	307	2242	2595	250	Ø4	SR15

Platen dimensions

unit: mm

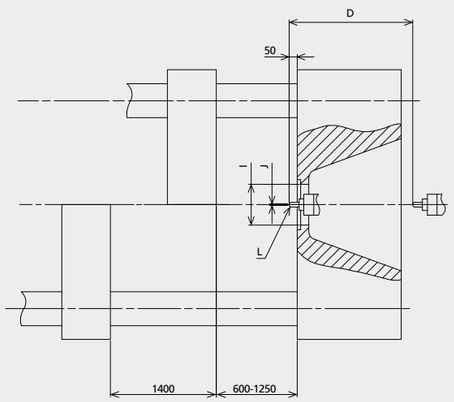

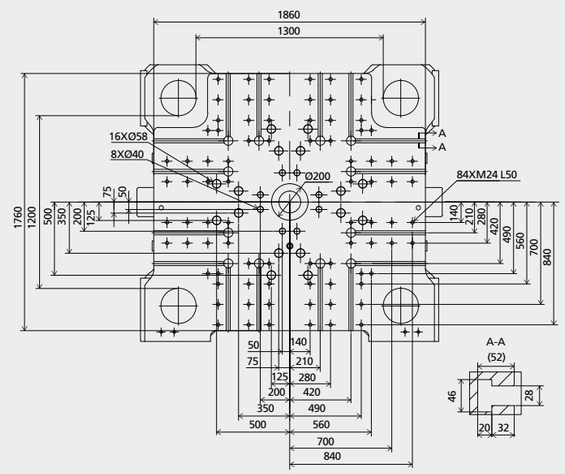

Others dimensions

unit: mm

Dimension for Hopper Installation

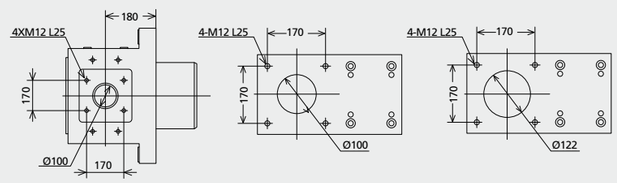

(3350) (5200) (7000 / 9200)

Dimension for Robot Installation

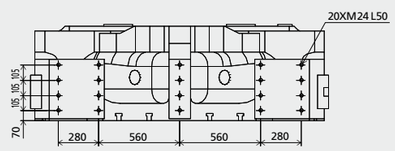

Technical data **JE13000**

CLAMPING UNIT		JE13000
Clamping force	kN	13000
Space between tie bars	mm	1420×1170
Max. mold height	mm	1350
Min. mold height	mm	600
Ejector stroke	mm	350
Ejector force	kN	230
Max. daylight	mm	2850
Mold opening stroke ①	mm	2250/1500
Max. mold weight ②	t	23
Min. mold dimension	mm	990×820
Mold platen dimension H×V	mm	2000×1770

INJECTION UNIT		5200			7000			9200		
		A	B	C	A	B	C	A	B	C
Screw diameter	mm	80	90	100	90	100	110	100	110	120
Screw L/D ratio	L/D	24.8	22	19.8	24.4	22	20	24.2	22	20.2
Shot size (theoretical)	cm^3	2262	2863	3534	2990	3691	4467	4006	4847	5768
Injection weight (PS)	g	2058	2605	3216	2721	3359	4065	3645	4411	5249
Injection speed	mm/s		160			150			150	
Injection rate	g/s	731	926	1143	868	1072	1297	1072	1297	1543
Injection pressure	MPa	227	180	145	234	190	157	230	190	160
	bar	2270	1800	1450	2340	1900	1570	2300	1900	1600
Holding pressure	MPa	204	162	131	200	162	134	202	167	141
	bar	2040	1620	1310	2000	1620	1340	2020	1670	1410
Screw speed	rpm		160			150			150	
Plasticizing capacity (GPPS) ③	g/s	78	98	120	99	120	145	130	156	181
Plasticizing capacity (HDPE) ④	g/s	116	146	180	147	180	214	190	228	260
Nozzle contact force	kN		94.8			94.8			94.8	
Heating power	kW		54.3			75.6			82.8	

OTHERS				
Connection power	kW/A	185/311	205/344	250/420
Hopper	kg	none (Options 100)	none (Options 100)	none (Options 200)
Machine dimension	m	11.36 × 3.52 × 2.88	11.36 × 3.52 × 2.88	11.36 × 3.52 × 2.88
Oil tank	l	830	830	830
Machine weight	t	56	63	63

NOTE:
① with min. mold height / with max. mold height
② moving platen: 2/3 of max. mold weight
③ Plasticizing capacity (GPPS): note: GB standard, with application of GPPS plasticizing capacity of 3-zone screws
④ Plasticizing capacity (HDPE): note: Euromap 19, with application of HDPE plasticizing capacity of barrier screws
The above plasticizing capacity is for reference only.

We reserve the right to make changes as a result of further technical advantages.

Machine dimensions

unit: mm

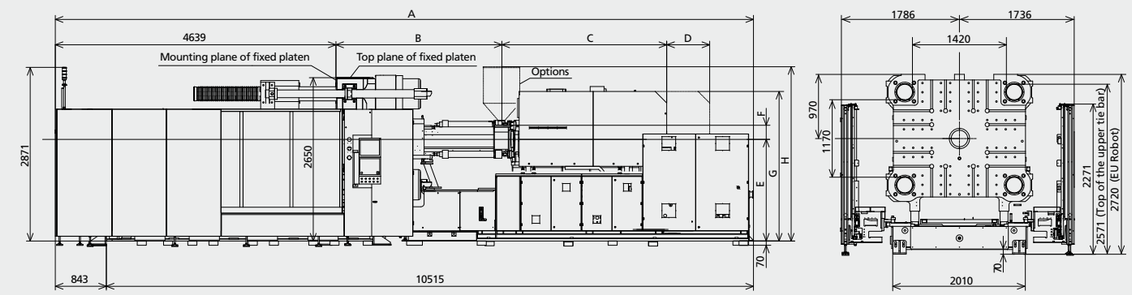

INJECTION UNIT	A	B	C	D	E	F	G	H	I	J	L
9200	11358	2730	2734	935	1680	233	2452	2907	250	Ø6	SR20
7000	11358	2504	2734	865	1680	233	2452	2907	250	Ø6	SR20
5200	11358	2256	2311	710	1680	215	2452	2890	250	Ø4	SR15

Platen dimensions

unit: mm

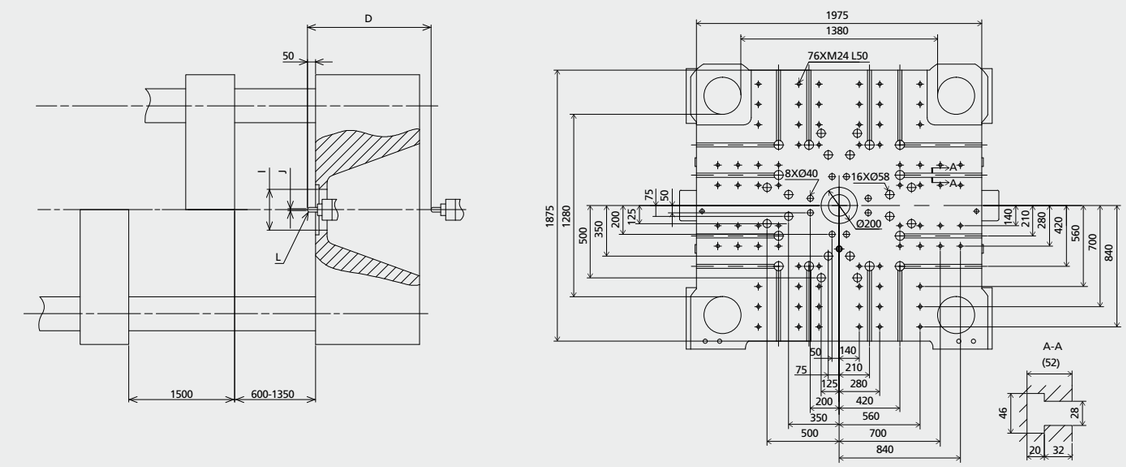

Others dimensions

unit: mm

Dimension for Hopper Installation

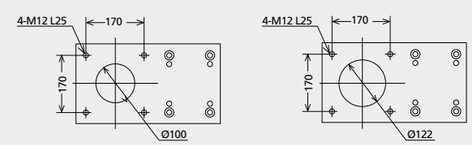

(5200) (7000 / 9200)

Dimension for Robot Installation

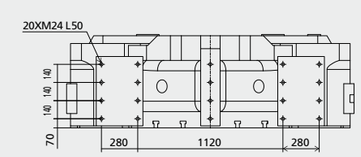

Technical data **JE14000**

CLAMPING UNIT		JE14000
Clamping force	kN	14000
Space between tie bars	mm	1460×1360
Max. mold height	mm	1450
Min. mold height	mm	700
Ejector stroke	mm	400
Ejector force	kN	330
Max. daylight	mm	3050
Mold opening stroke ①	mm	2350/1600
Max. mold weight ②	t	27
Min. mold dimension	mm	1020×950
Mold platen dimension H×V	mm	2072×1972

INJECTION UNIT		5200			7000			9200		
		A	B	C	A	B	C	A	B	C
Screw diameter	mm	80	90	100	90	100	110	100	110	120
Screw L/D ratio	L/D	24.8	22	19.8	24.4	22	20	24.2	22	20.2
Shot size (theoretical)	cm^3	2262	2863	3534	2990	3691	4467	4006	4847	5768
Injection weight (PS)	g	2058	2605	3216	2721	3359	4065	3645	4411	5249
Injection speed	mm/s		160			150			150	
Injection rate	g/s	731	926	1143	868	1072	1297	1072	1297	1543
Injection pressure	MPa	227	180	145	234	190	157	230	190	160
	bar	2270	1800	1450	2340	1900	1570	2300	1900	1600
Holding pressure	MPa	204	162	131	200	162	134	202	167	141
	bar	2040	1620	1310	2000	1620	1340	2020	1670	1410
Screw speed	rpm		160			150			150	
Plasticizing capacity (GPPS) ③	g/s	78	98	120	99	120	145	130	156	181
Plasticizing capacity (HDPE) ④	g/s	116	146	180	147	180	214	190	228	260
Nozzle contact force	kN		94.8			94.8			94.8	
Heating power	kW		54.3			75.6			82.8	

OTHERS				
Connection power	kW/A	185/311	205/344	250/420
Hopper	kg	none (Options 100)	none (Options 100)	none (Options 200)
Machine dimension	m	11.73 × 3.6 × 2.87	11.73 × 3.6 × 2.87	11.73 × 3.6 × 2.87
Oil tank	l	830	830	830
Machine weight	t	67	73	73

NOTE:
① with min. mold height / with max. mold height
② moving platen: 2/3 of max. mold weight
③ Plasticizing capacity (GPPS): note: GB standard, with application of GPPS plasticizing capacity of 3-zone screws
④ Plasticizing capacity (HDPE): note: Euromap 19, with application of HDPE plasticizing capacity of barrier screws
The above plasticizing capacity is for reference only.

We reserve the right to make changes as a result of further technical advantages.

Machine dimensions

unit: mm

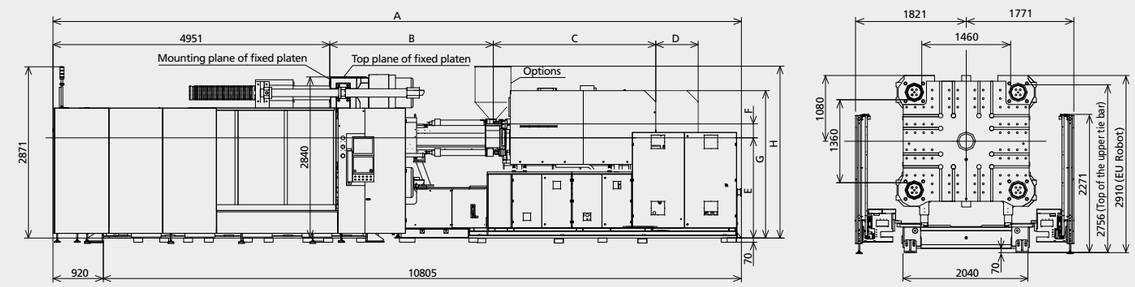

INJECTION UNIT	A	B	C	D	E	F	G	H	I	J	L
9200	11925	2730	2734	935	1760	233	2532	2987	250	Ø6	SR20
7000	11925	2504	2734	865	1760	233	2532	2987	250	Ø6	SR20
5200	11925	2256	2311	710	1760	215	2532	2970	250	Ø4	SR15

Platen dimensions

unit: mm

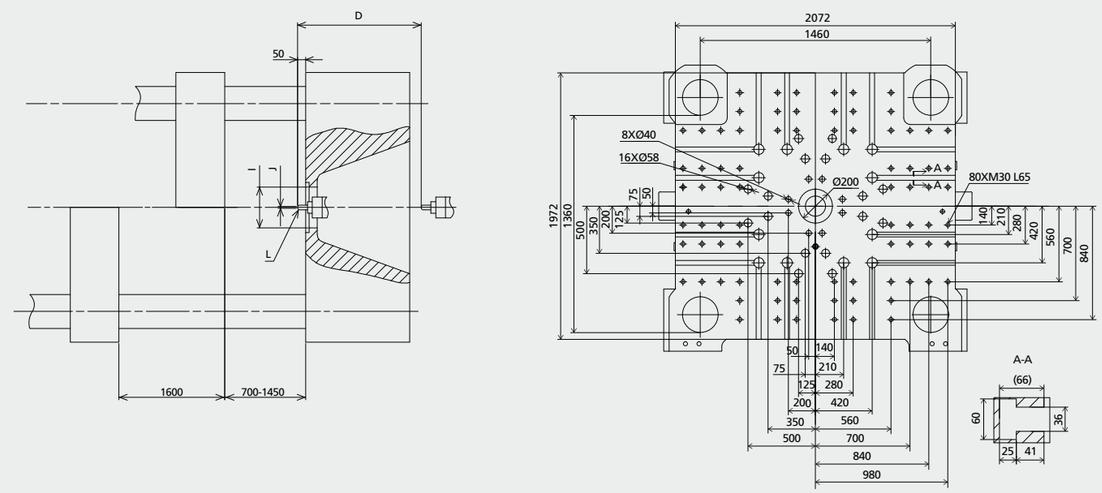

Others dimensions

unit: mm

Dimension for Hopper Installation

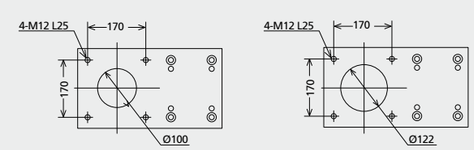

(5200) (7000 / 9200)

Dimension for Robot Installation

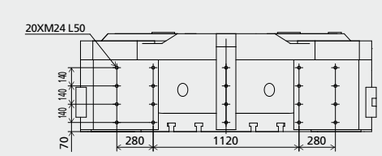

Technical data **JE16000**

CLAMPING UNIT		JE16000
Clamping force	kN	16000
Space between tie bars	mm	1570×1285
Max. mold height	mm	1550
Min. mold height	mm	700
Ejector stroke	mm	400
Ejector force	kN	330
Max. daylight	mm	3250
Mold opening stroke ①	mm	2550/1700
Max. mold weight ②	t	33
Min. mold dimension	mm	1100×900
Mold platen dimension H×V	mm	2220×1950

INJECTION UNIT		5200			7000			9200		
		A	B	C	A	B	C	A	B	C
Screw diameter	mm	80	90	100	90	100	110	100	110	120
Screw L/D ratio	L/D	24.8	22	19.8	24.4	22	20	24.2	22	20.2
Shot size (theoretical)	cm^3	2262	2863	3534	2990	3691	4467	4006	4847	5768
Injection weight (PS)	g	2058	2605	3216	2721	3359	4065	3645	4411	5249
Injection speed	mm/s		160			150			150	
Injection rate	g/s	731	926	1143	868	1072	1297	1072	1297	1543
Injection pressure	MPa	227	180	145	234	190	157	230	190	160
	bar	2270	1800	1450	2340	1900	1570	2300	1900	1600
Holding pressure	MPa	204	162	131	200	162	134	202	167	141
	bar	2040	1620	1310	2000	1620	1340	2020	1670	1410
Screw speed	rpm		160			150			150	
Plasticizing capacity (GPPS) ③	g/s	78	98	120	99	120	145	130	156	181
Plasticizing capacity (HDPE) ④	g/s	116	146	180	147	180	214	190	228	260
Nozzle contact force	kN		94.8			94.8			94.8	
Heating power	kW		54.3			75.6			82.8	

OTHERS				
Connection power	kW/A	185/311	205/344	250/420
Hopper	kg	none (Options 100)	none (Options 100)	none (Options 200)
Machine dimension	m	11.93 × 3.77 × 2.98	11.93 × 3.77 × 2.98	11.93 × 3.77 × 2.98
Oil tank	l	1080	1080	1080
Machine weight	t	78	85	85

NOTE:
① with min. mold height / with max. mold height
② moving platen: 2/3 of max. mold weight
③ Plasticizing capacity (GPPS): note: GB standard, with application of GPPS plasticizing capacity of 3-zone screws
④ Plasticizing capacity (HDPE): note: Euromap 19, with application of HDPE plasticizing capacity of barrier screws
The above plasticizing capacity is for reference only.

We reserve the right to make changes as a result of further technical advantages.

Machine dimensions

unit: mm

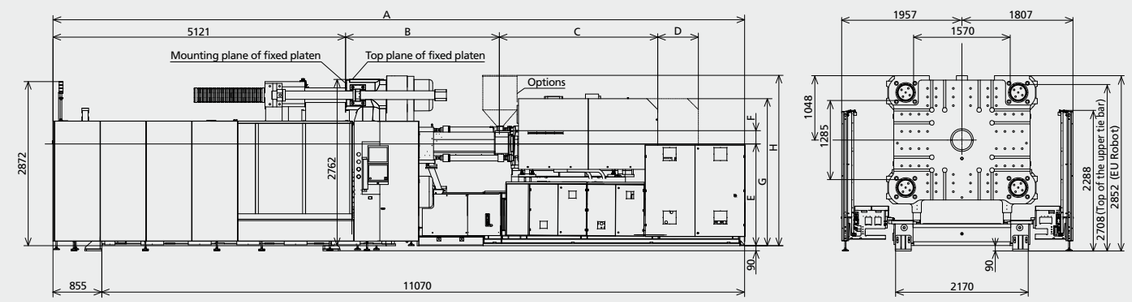

INJECTION UNIT	A	B	C	D	E	F	G	H	I	J	L
9200	11925	2730	2734	935	1780	233	2552	3007	315	Ø6	SR20
7000	11925	2504	2734	865	1780	233	2552	3007	315	Ø6	SR20
5200	11925	2256	2311	710	1780	215	2552	2990	315	Ø4	SR15

Platen dimensions

unit: mm

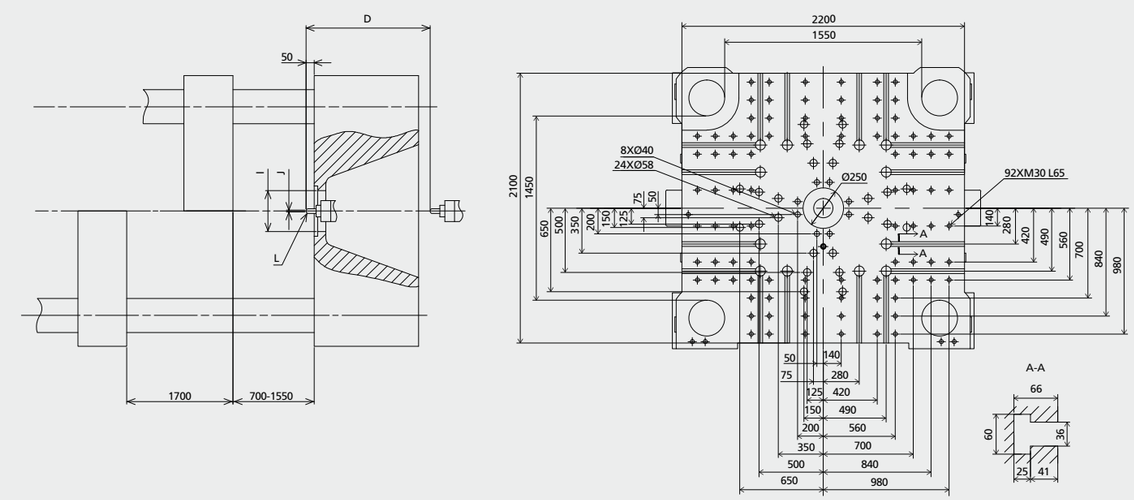

Others dimensions

unit: mm

Dimension for Hopper Installation

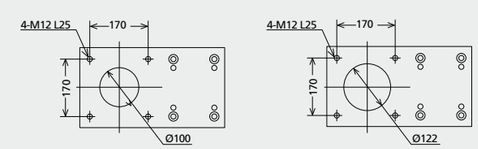

(5200) (7000 / 9200)

Dimension for Robot Installation

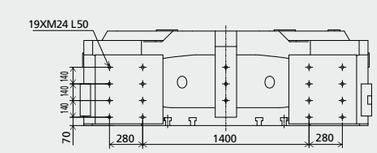

Technical data **JE18500**

CLAMPING UNIT		JE18500
Clamping force	kN	18500
Space between tie bars	mm	1870×1425
Max. mold height	mm	1600
Min. mold height	mm	750
Ejector stroke	mm	450
Ejector force	kN	450
Max. daylight	mm	3350
Mold opening stroke ①	mm	2600/1750
Max. mold weight ②	t	40
Min. mold dimension	mm	1310×995
Mold platen dimension H×V	mm	2590×2150

INJECTION UNIT		9200			12800			17800		
		A	B	C	A	B	C	A	B	C
Screw diameter	mm	100	110	120	110	120	130	130	140	150
Screw L/D ratio	L/D	24.2	22	20.2	26.2	24	22.2	24	22.3	20.8
Shot size (theoretical)	cm^3	4006	4847	5768	5227	6220	7300	8362	9698	11133
Injection weight (PS)	g	3645	4411	5249	4756	5660	6643	7609	8825	10131
Injection speed	mm/s		150			130			130	
Injection rate	g/s	1072	1297	1543	1123	1337	1569	1569	1820	2089
Injection pressure	MPa	230	190	160	230	205	175	213	184	160
	bar	2300	1900	1600	2300	2050	1750	2130	1840	1600
Holding pressure	MPa	202	167	141	207	184	158	191	165	144
	bar	2020	1670	1410	2070	1840	1580	1910	1650	1440
Screw speed	rpm		150			140			120	
Plasticizing capacity (GPPS) ③	g/s	130	156	181	163	189	218	198	226	258
Plasticizing capacity (HDPE) ④	g/s	190	228	260	250	290	320	297	333	396
Nozzle contact force	kN		94.8			136.1			136.1	
Heating power	kW		82.8			104			115.5	

OTHERS				
Connection power	kW/A	250/420	246/412	306/514
Hopper	kg	none (Options 200)	none (Options 400)	none (Options 400)
Machine dimension	m	13.24×4.15×3.85	13.24×4.15×3.85	13.24×4.15×3.85
Oil tank	l	1100	1100	1100
Machine weight	t	111	125	125

NOTE:
① with min. mold height / with max. mold height
② moving platen: 2/3 of max. mold weight
③ Plasticizing capacity (GPPS): note: GB standard, with application of GPPS plasticizing capacity of 3-zone screws
④ Plasticizing capacity (HDPE): note: Euromap 19, with application of HDPE plasticizing capacity of barrier screws
The above plasticizing capacity is for reference only.

We reserve the right to make changes as a result of further technical advantages.

Machine dimensions

unit: mm

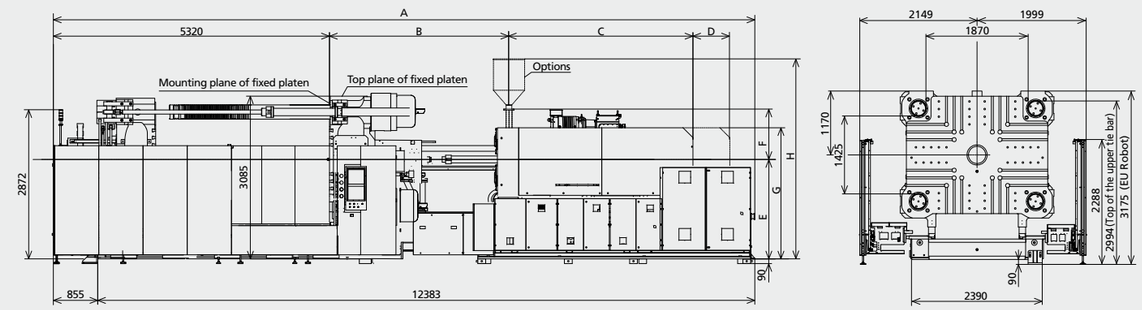

The above-mentioned figures of the machine do not apply to the injection unit of 9200 and above.

INJECTION UNIT	A	B	C	D	E	F	G	H	I	J	L
17800	13283	3453	3550	1080	1915	970	2485	3812	315	Ø8	SR20
12800	13283	3189	3550	1080	1915	970	2485	3812	315	Ø6	SR20

Platen dimensions

unit: mm

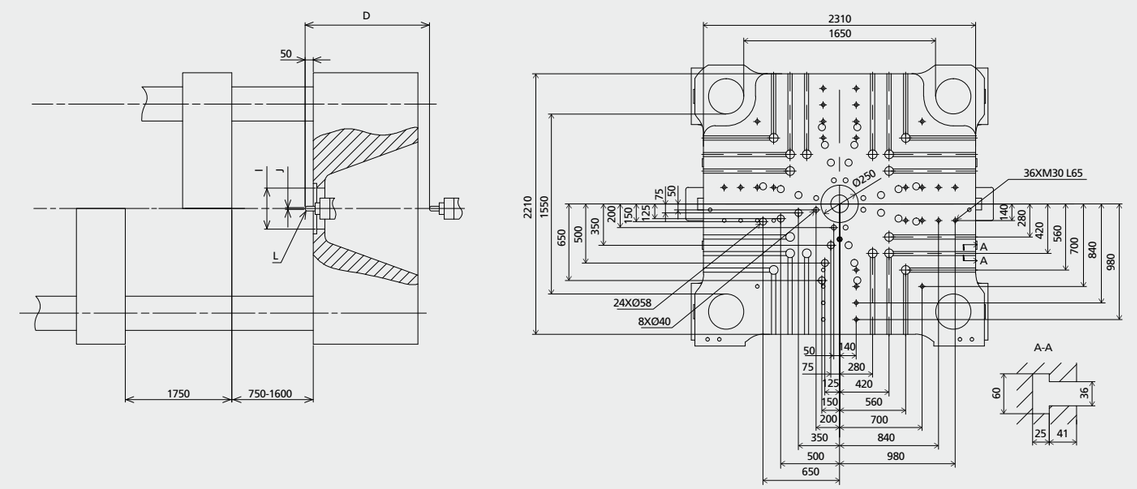

Others dimensions

unit: mm

Dimension for Hopper Installation

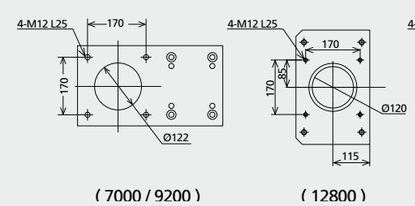

Dimension for Robot Installation

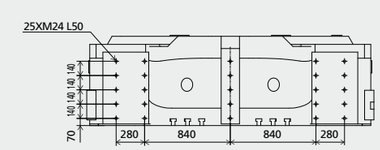

Technical data **JE21000**

CLAMPING UNIT		JE21000
Clamping force	kN	21000
Space between tie bars	mm	1800×1600
Max. mold height	mm	1700
Min. mold height	mm	800
Ejector stroke	mm	450
Ejector force	kN	450
Max. daylight	mm	3500
Mold opening stroke ①	mm	2700/1800
Max. mold weight ②	t	50
Min. mold dimension	mm	1260×1120
Mold platen dimension H×V	mm	2540×2340

INJECTION UNIT		9200			12800			17800		
		A	B	C	A	B	C	A	B	C
Screw diameter	mm	100	110	120	110	120	130	130	140	150
Screw L/D ratio	L/D	24.2	22	20.2	26.2	24	22.2	24	22.3	20.8
Shot size (theoretical)	cm^3	4006	4847	5768	5227	6220	7300	8362	9698	11133
Injection weight (PS)	g	3645	4411	5249	4756	5660	6643	7609	8825	10131
Injection speed	mm/s		150			130			130	
Injection rate	g/s	1072	1297	1543	1123	1337	1569	1569	1820	2089
Injection pressure	MPa	230	190	160	230	205	175	213	184	160
	bar	2300	1900	1600	2300	2050	1750	2130	1840	1600
Holding pressure	MPa	202	167	141	207	184	158	191	165	144
	bar	2020	1670	1410	2070	1840	1580	1910	1650	1440
Screw speed	rpm		150			140			120	
Plasticizing capacity (GPPS) ③	g/s	130	156	181	163	189	218	198	226	258
Plasticizing capacity (HDPE) ④	g/s	190	228	260	250	290	320	297	333	396
Nozzle contact force	kN		94.8			136.1			136.1	
Heating power	kW		82.8			104			115.5	

OTHERS				
Connection power	kW/A	250/420	246/412	306/514
Hopper	kg	none (Options 200)	none (Options 400)	none (Options 400)
Machine dimension	m	13.41×5.24×3.81	13.41×5.24×3.81	13.41×5.24×3.81
Oil tank	l	1100	1100	1100
Machine weight	t	115	127	129

NOTE:
① with min. mold height / with max. mold height
② moving platen: 2/3 of max. mold weight
③ Plasticizing capacity (GPPS): note: GB standard, with application of GPPS plasticizing capacity of 3-zone screws
④ Plasticizing capacity (HDPE): note: Euromap 19, with application of HDPE plasticizing capacity of barrier screws
The above plasticizing capacity is for reference only.

We reserve the right to make changes as a result of further technical advantages.

Machine dimensions

unit: mm

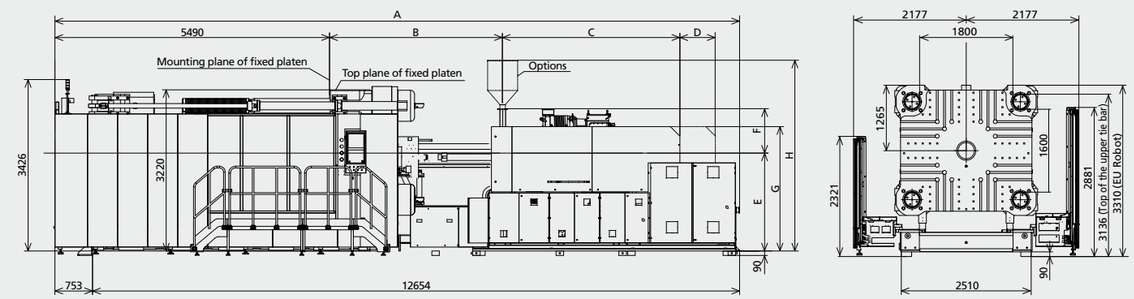

The above-mentioned figures of the machine do not apply to the injection unit of 9200 and above.

INJECTION UNIT	A	B	C	D	E	F	G	H	I	J	L
17800	13407	3453	3550	1080	1955	970	2525	3852	315	Ø8	SR20
12800	13407	3189	3550	1080	1955	970	2525	3852	315	Ø6	SR20

Platen dimensions

unit: mm

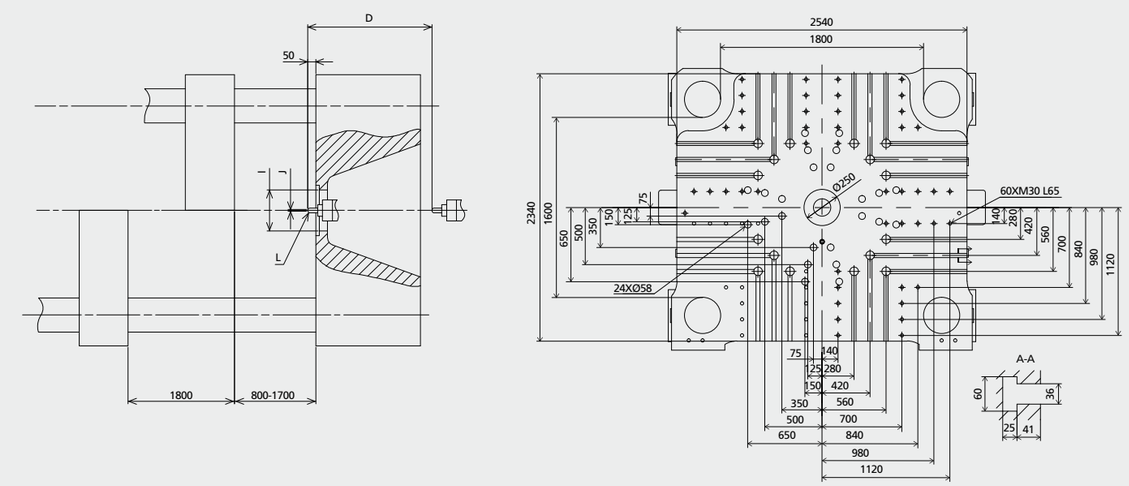

Others dimensions

unit: mm

Dimension for Hopper Installation

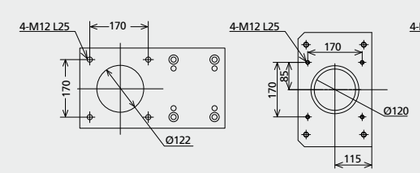

(7000 / 9200) (12800) (17800)

Dimension for Robot Installation

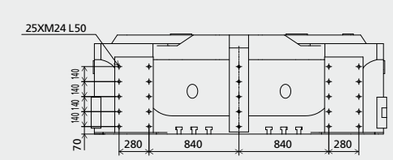

Technical data **JE24000**

CLAMPING UNIT		JE24000
Clamping force	kN	24000
Space between tie bars	mm	2020×1620
Max. mold height	mm	1800
Min. mold height	mm	800
Ejector stroke	mm	500
Ejector force	kN	450
Max. daylight	mm	3800
Mold opening stroke ①	mm	3000/2000
Max. mold weight ②	t	59
Min. mold dimension	mm	1415×1135
Mold platen dimension H×V	mm	2790×2390

INJECTION UNIT		9200			12800			17800		
		A	B	C	A	B	C	A	B	C
Screw diameter	mm	100	110	120	110	120	130	130	140	150
Screw L/D ratio	L/D	24.2	22	20.2	26.2	24	22.2	24	22.3	20.8
Shot size (theoretical)	cm^3	4006	4847	5768	5227	6220	7300	8362	9698	11133
Injection weight (PS)	g	3645	4411	5249	4756	5660	6643	7609	8825	10131
Injection speed	mm/s		150			130			130	
Injection rate	g/s	1072	1297	1543	1123	1337	1569	1569	1820	2089
Injection pressure	MPa	230	190	160	230	205	175	213	184	160
	bar	2300	1900	1600	2300	2050	1750	2130	1840	1600
Holding pressure	MPa	202	167	141	207	184	158	191	165	144
	bar	2020	1670	1410	2070	1840	1580	1910	1650	1440
Screw speed	rpm		150			140			120	
Plasticizing capacity (GPPS) ③	g/s	130	156	181	163	189	218	198	226	258
Plasticizing capacity (HDPE) ④	g/s	190	228	260	250	290	320	297	333	396
Nozzle contact force	kN		94.8			136.1			136.1	
Heating power	kW		82.8			104			115.5	

OTHERS				
Connection power	kW/A	250/420	246/412	306/514
Hopper	kg	none (Options 200)	none (Options 400)	none (Options 400)
Machine dimension	m	14.06×5.46×4.01	14.06×5.46×4.01	14.06×5.46×4.01
Oil tank	l	1100	1100	1100
Machine weight	t	126	138	138

NOTE:
① with min. mold height / with max. mold height
② moving platen: 2/3 of max. mold weight
③ Plasticizing capacity (GPPS): note: GB standard, with application of GPPS plasticizing capacity of 3-zone screws
④ Plasticizing capacity (HDPE): note: Euromap 19, with application of HDPE plasticizing capacity of barrier screws
The above plasticizing capacity is for reference only.

We reserve the right to make changes as a result of further technical advantages.

Machine dimensions

unit: mm

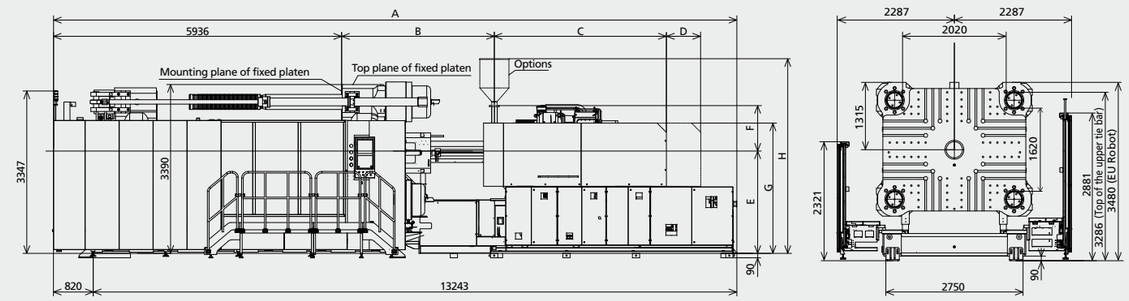

The above-mentioned figures of the machine do not apply to the injection unit of 9200 and above.

INJECTION UNIT	A	B	C	D	E	F	G	H	I	J	L
17800	14063	3453	3550	1080	2110	970	2680	4007	315	Ø8	SR20
12800	14063	3189	3550	1080	2110	970	2680	4007	315	Ø6	SR20

Platen dimensions

unit: mm

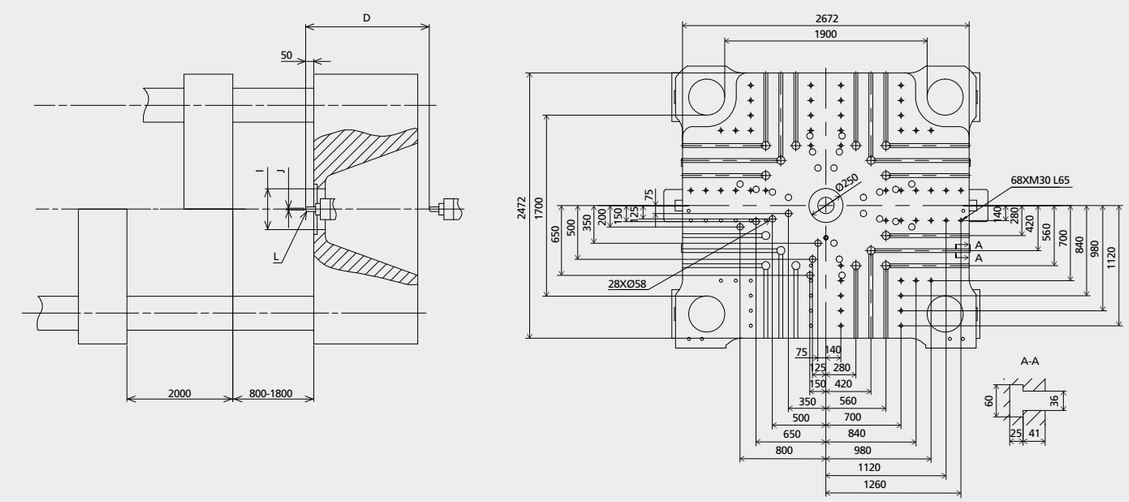

Others dimensions

unit: mm

Dimension for Hopper Installation

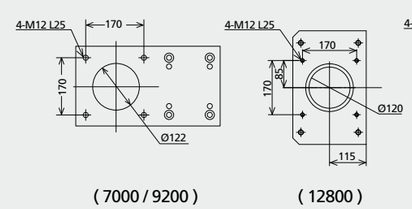

(7000 / 9200) (12800) (17800)

Dimension for Robot Installation

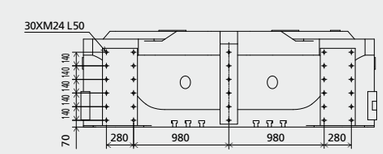

Technical data **JE28000**

CLAMPING UNIT		JE28000
Clamping force	kN	28000
Space between tie bars	mm	2185×1755
Max. mold height	mm	2000
Min. mold height	mm	800
Ejector stroke	mm	500
Ejector force	kN	450
Max. daylight	mm	4100
Mold opening stroke ①	mm	3300/2100
Max. mold weight ②	t	66
Min. mold dimension	mm	1530×1230
Mold platen dimension H×V	mm	3005×2575

INJECTION UNIT		12800			17800			22800	
		A	B	C	A	B	C	A	B
Screw diameter	mm	110	120	130	130	140	150	140	150
Screw L/D ratio	L/D	26.2	24	22.2	24	22.3	20.8	24	22.4
Shot size (theoretical)	cm^3	5227	6220	7300	8362	9698	11133	10468	12017
Injection weight (PS)	g	4756	5660	6643	7609	8825	10131	9525	10935
Injection speed	mm/s	130			130			130	
Injection rate	g/s	1123	1337	1569	1569	1820	2089	1820	2089
Injection pressure	MPa	230	205	175	213	184	160	218	190
	bar	2300	2050	1750	2130	1840	1600	2180	1900
Holding pressure	MPa	207	184	158	191	165	144	196	171
	bar	2070	1840	1580	1910	1650	1440	1960	1710
Screw speed	rpm	140			120			110	
Plasticizing capacity (GPPS) ③	g/s	163	189	218	198	226	258	200	228
Plasticizing capacity (HDPE) ④	g/s	250	290	320	297	333	396	314	380
Nozzle contact force	kN	136.1			136.1			136.1	
Heating power	kW	104			115.5			133	

OTHERS				
Connection power	kW/A	246/412	306/514	330/554
Hopper	kg	none (Options 400)	none (Options 400)	none (Options 400)
Machine dimension	m	14.86×5.65×4.25	14.86×5.65×4.25	14.86×5.65×4.25
Oil tank	l	1740	1740	1740
Machine weight	t	160	160	166

NOTE:
① with min. mold height / with max. mold height
② moving platen: 2/3 of max. mold weight
③ Plasticizing capacity (GPPS): note: GB standard, with application of GPPS plasticizing capacity of 3-zone screws
④ Plasticizing capacity (HDPE): note: Euromap 19, with application of HDPE plasticizing capacity of barrier screws
The above plasticizing capacity is for reference only.

We reserve the right to make changes as a result of further technical advantages.

Machine dimensions

unit: mm

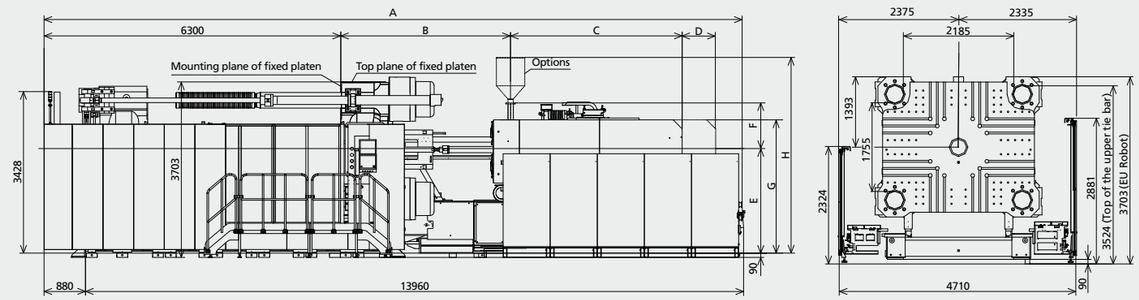

INJECTION UNIT	A	B	C	D	E	F	G	H	I	J	L
22800	14840	3726	3522	1280	2220	1210	2790	4357	315	Ø8	SR20
17800	14840	3453	3550	1280	2220	970	2790	4117	315	Ø8	SR20
12800	14840	3189	3550	1280	2220	970	2790	4117	315	Ø6	SR20

Platen dimensions

unit: mm

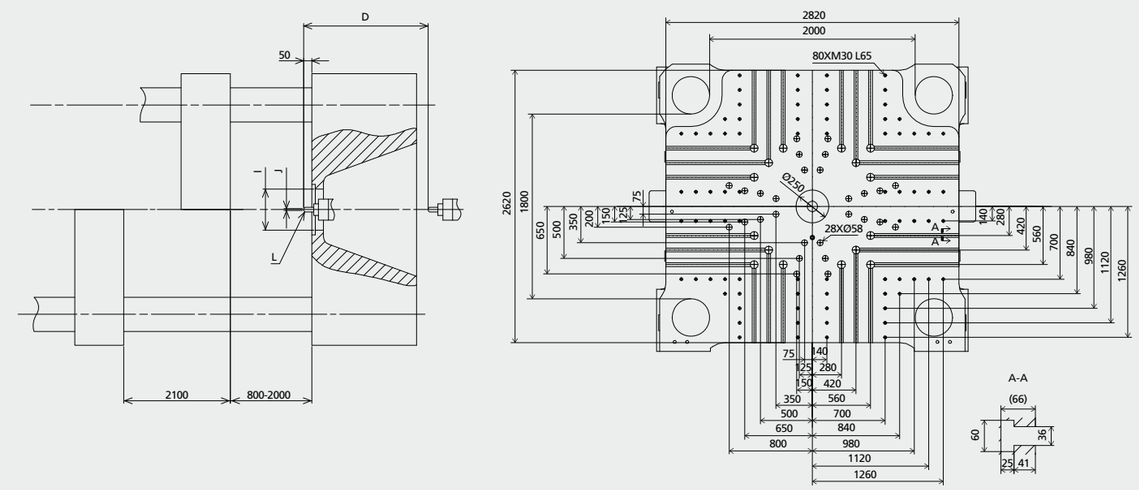

Others dimensions

unit: mm

Dimension for Hopper Installation

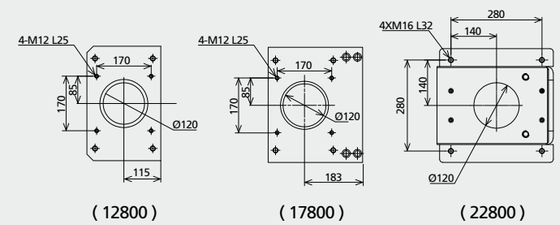

(12800) (17800) (22800)

Dimension for Robot Installation

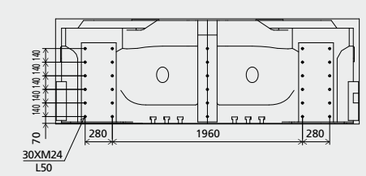

Technical data **JE33000**

CLAMPING UNIT		JE33000
Clamping force	kN	33000
Space between tie bars	mm	2270×1900
Max. mold height	mm	2000
Min. mold height	mm	1000
Ejector stroke	mm	550
Ejector force	kN	580
Max. daylight	mm	4200
Mold opening stroke ①	mm	3200/2200
Max. mold weight ②	t	75
Min. mold dimension	mm	1590×1330
Mold platen dimension H×V	mm	3175×2805

INJECTION UNIT		12800			17800			22800	
		A	B	C	A	B	C	A	B
Screw diameter	mm	110	120	130	130	140	150	140	150
Screw L/D ratio	L/D	26.2	24	22.2	24	22.3	20.8	24	22.4
Shot size (theoretical)	cm^3	5227	6220	7300	8362	9698	11133	10468	12017
Injection weight (PS)	g	4756	5660	6643	7609	8825	10131	9525	10935
Injection speed	mm/s	130			130			130	
Injection rate	g/s	1123	1337	1569	1569	1820	2089	1820	2089
Injection pressure	MPa	230	205	175	213	184	160	218	190
	bar	2300	2050	1750	2130	1840	1600	2180	1900
Holding pressure	MPa	207	184	158	191	165	144	196	171
	bar	2070	1840	1580	1910	1650	1440	1960	1710
Screw speed	rpm	140			120			110	
Plasticizing capacity (GPPS) ③	g/s	163	189	218	198	226	258	200	228
Plasticizing capacity (HDPE) ④	g/s	250	290	320	297	333	396	314	380
Nozzle contact force	kN	136.1			136.1			136.1	
Heating power	kW	104			115.5			133	

OTHERS				
Connection power	kW/A	246/412	306/514	330/554
Hopper	kg	none (Options 400)	none (Options 400)	none (Options 400)
Machine dimension	m	15.11×5.92×4.43	15.11×5.92×4.43	15.11×5.92×4.43
Oil tank	l	1740	1740	1740
Machine weight	t	189	189	195

NOTE:
① with min. mold height / with max. mold height
② moving platen: 2/3 of max. mold weight
③ Plasticizing capacity (GPPS): note: GB standard, with application of GPPS plasticizing capacity of 3-zone screws
④ Plasticizing capacity (HDPE): note: Euromap 19, with application of HDPE plasticizing capacity of barrier screws
The above plasticizing capacity is for reference only.

We reserve the right to make changes as a result of further technical advantages.

Machine dimensions

unit: mm

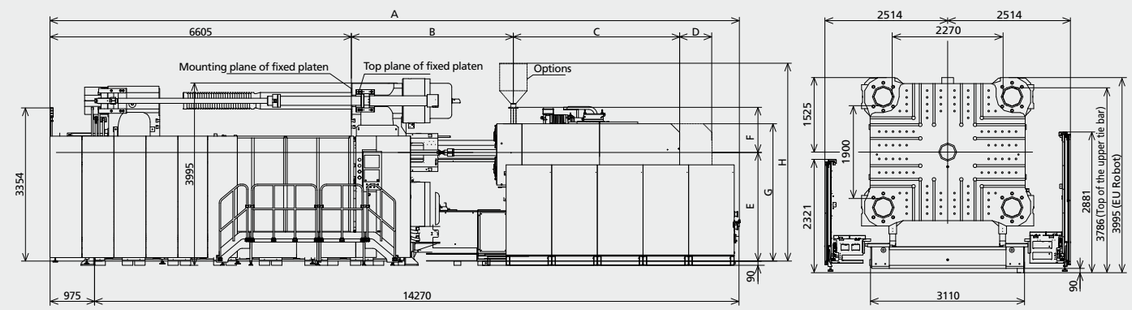

INJECTION UNIT	A	B	C	D	E	F	G	H	I	J	L
22800	15245	3726	3522	1280	2380	1210	2950	4517	315	Ø8	SR20
17800	15245	3453	3550	1280	2380	970	2950	4277	315	Ø8	SR20
12800	15245	3189	3550	1280	2380	970	2950	4277	315	Ø6	SR20

Platen dimensions

unit: mm

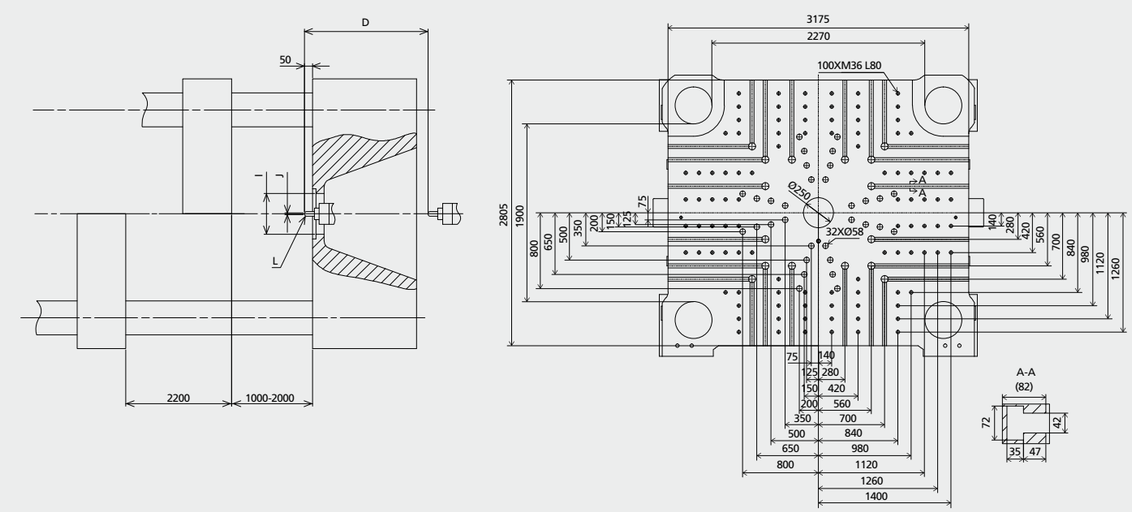

Others dimensions

unit: mm

Dimension for Hopper Installation

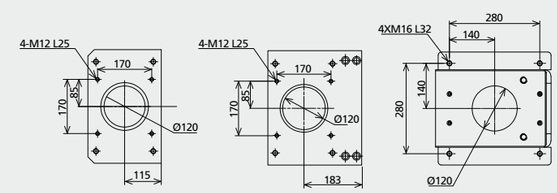

(12800) (17800) (22800)

Dimension for Robot Installation

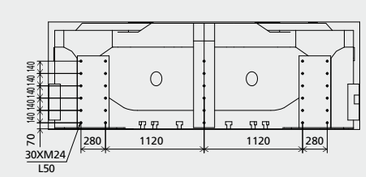

Platen Layout **JE12000**

European version

unit: mm

Movable platen

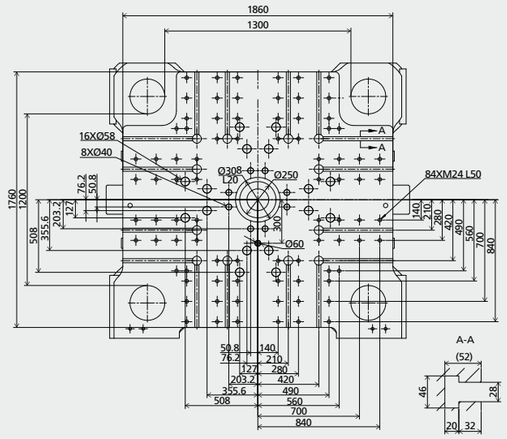

Fixed platen

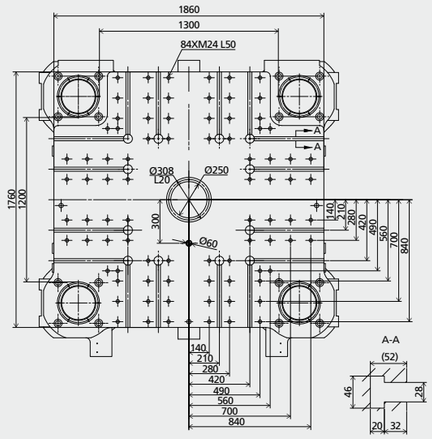

American version

unit: mm

Movable platen

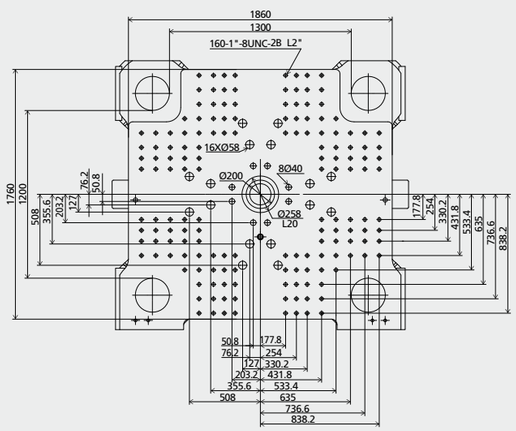

Fixed platen

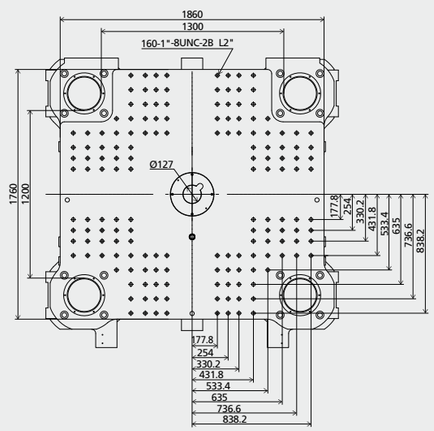

Japanese version

unit: mm

Movable platen

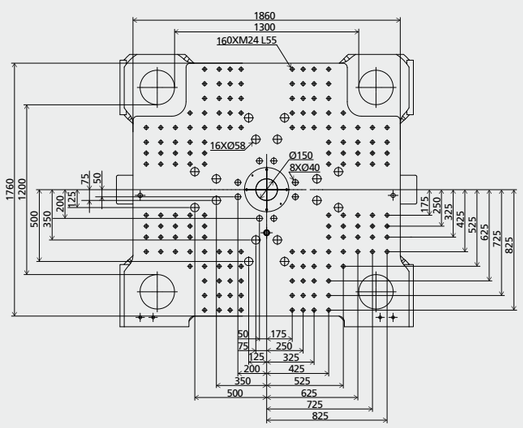

Fixed platen

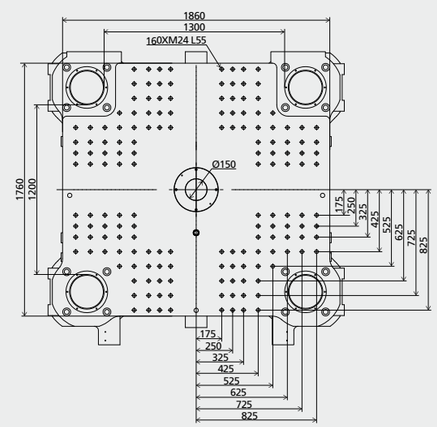

Platen Layout **JE13000**

European version

unit: mm

Movable platen

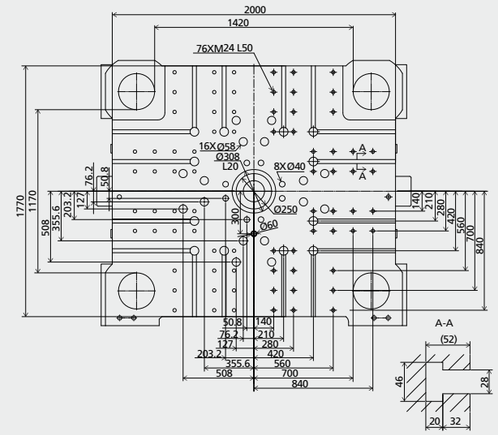

Fixed platen

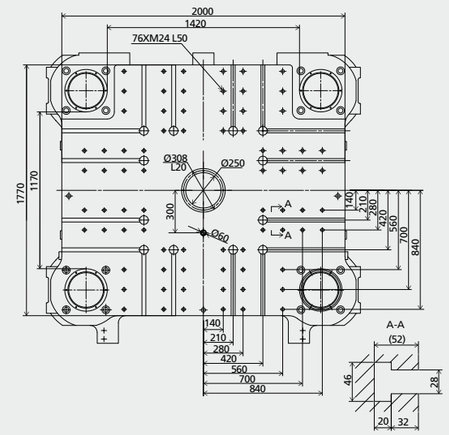

American version

unit: mm

Movable platen

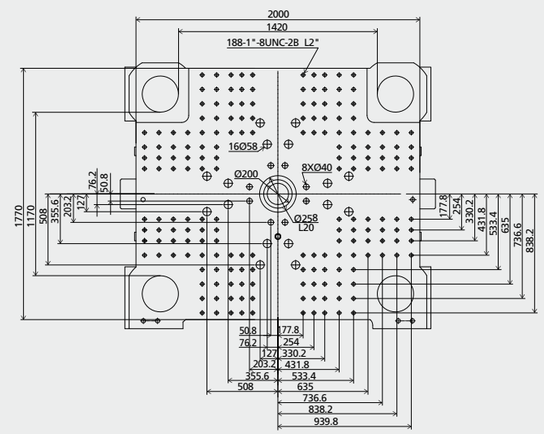

Fixed platen

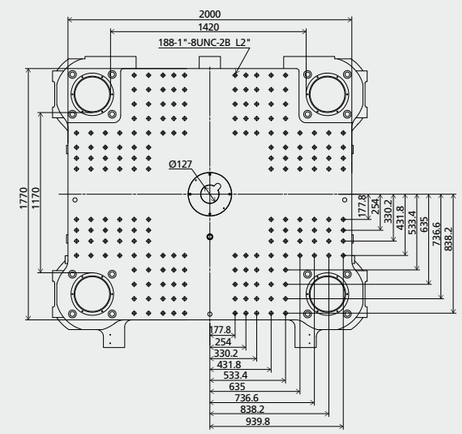

Japanese version

unit: mm

Movable platen

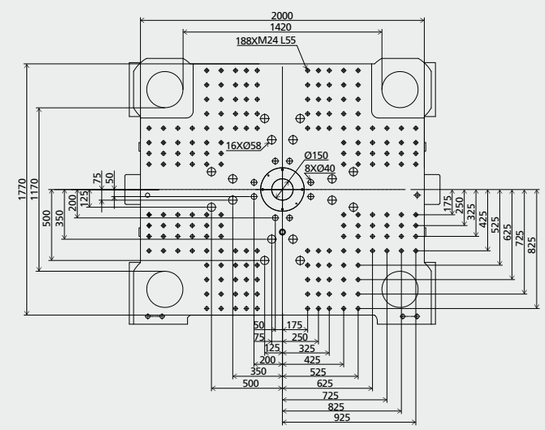

Fixed platen

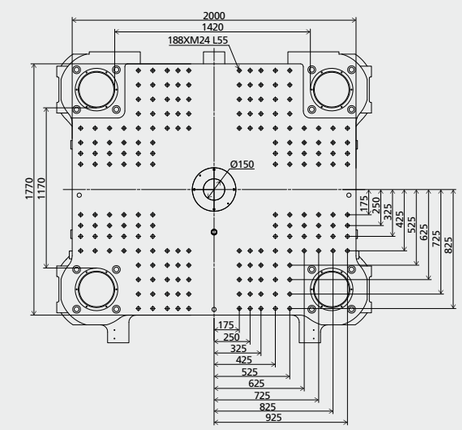

Platen Layout **JE14000**

European version

unit: mm

Movable platen

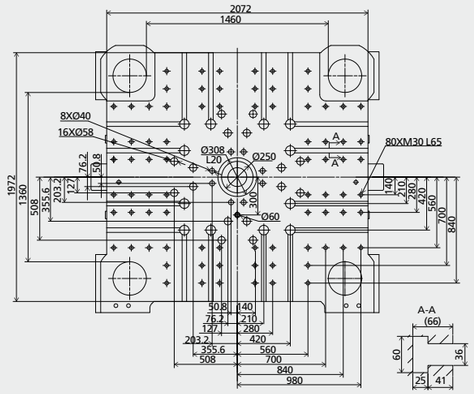

Fixed platen

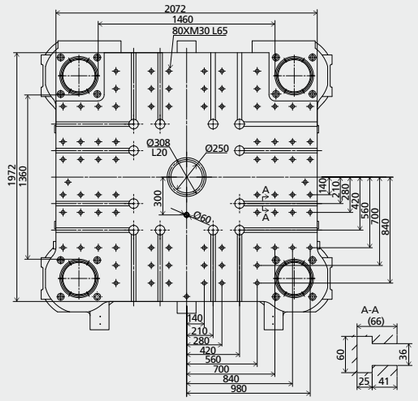

American version

unit: mm

Movable platen

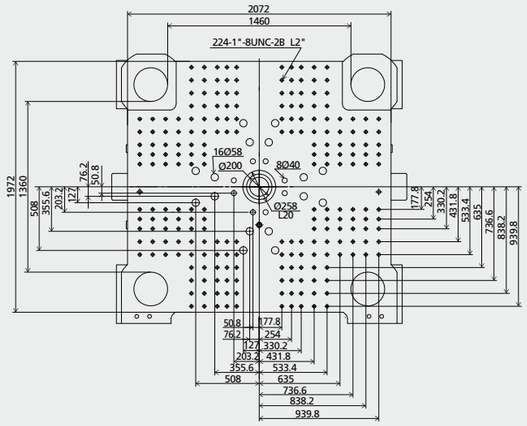

Fixed platen

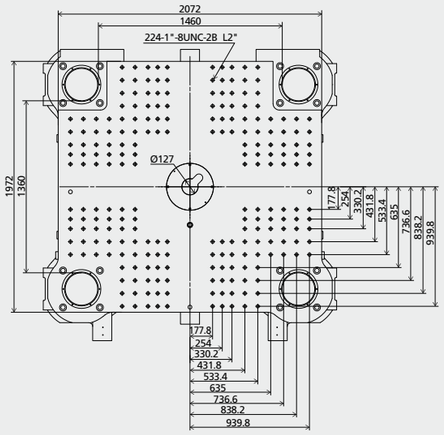

Japanese version

unit: mm

Movable platen

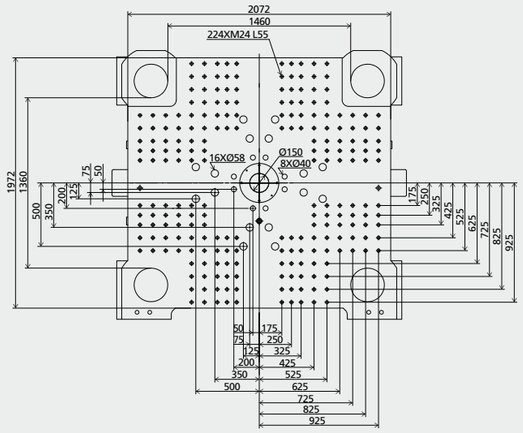

Fixed platen

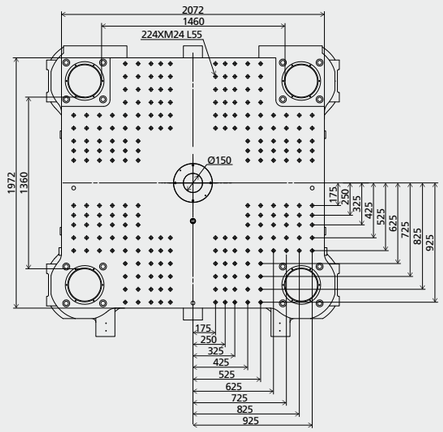

Platen Layout **JE16000**

European version

unit: mm

Movable platen

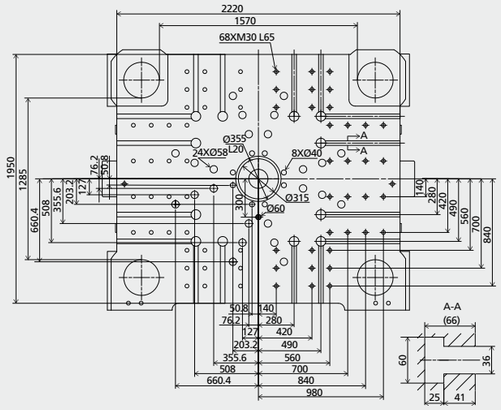

Fixed platen

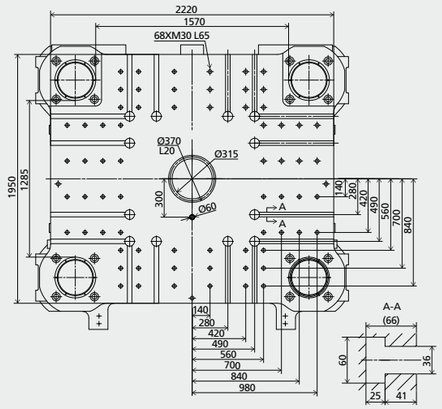

American version

unit: mm

Movable platen

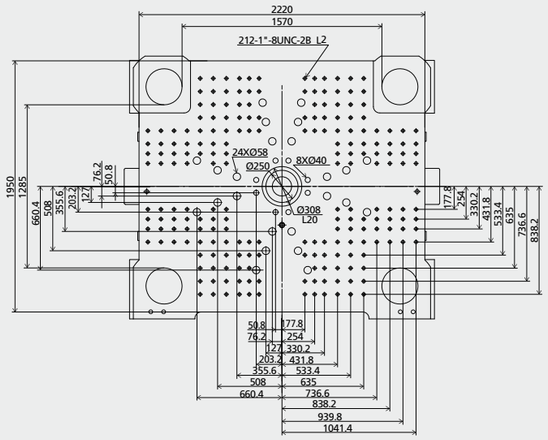

Fixed platen

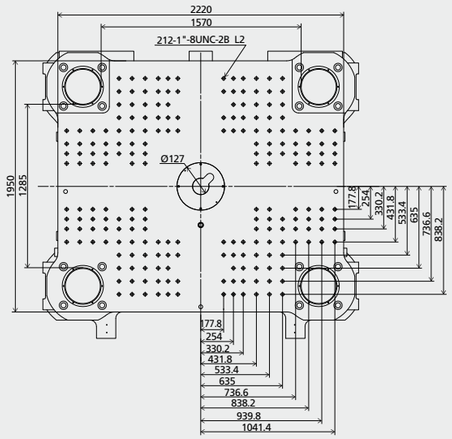

Japanese version

unit: mm

Movable platen

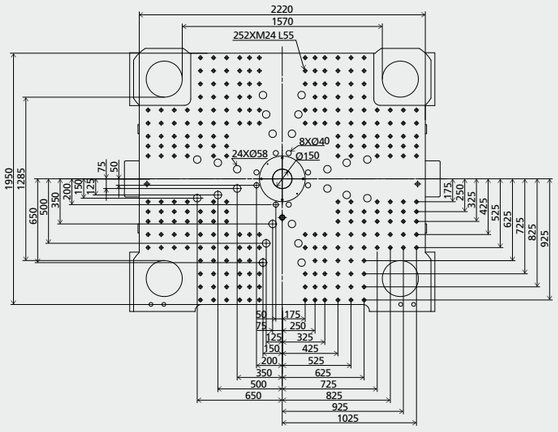

Fixed platen

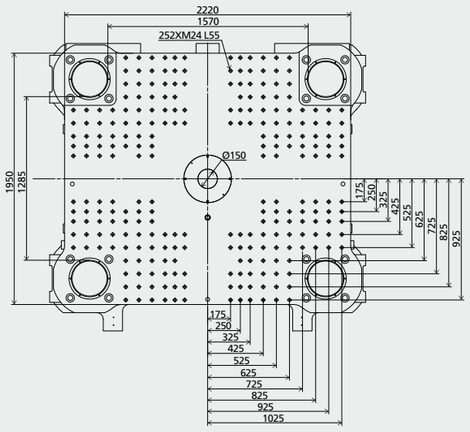

Platen Layout JE18500

European version

unit: mm

Movable platen

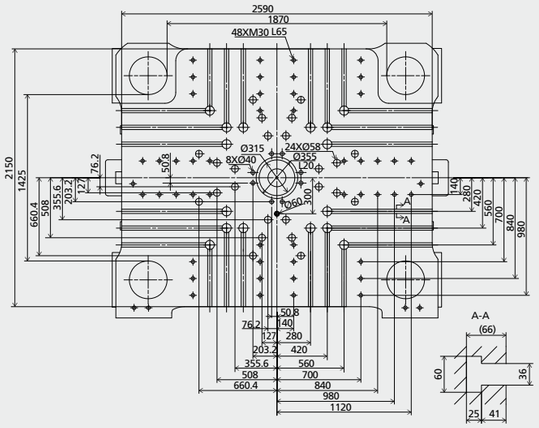

Fixed platen

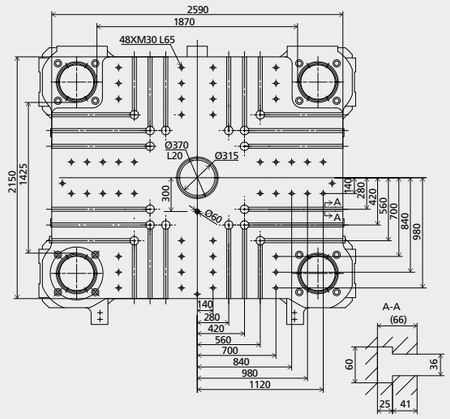

American version

unit: mm

Movable platen

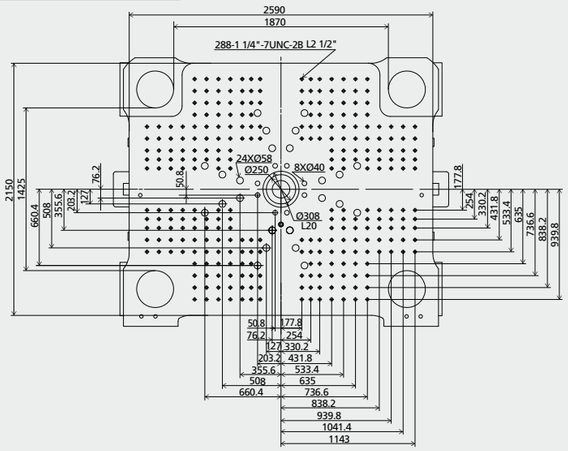

Fixed platen

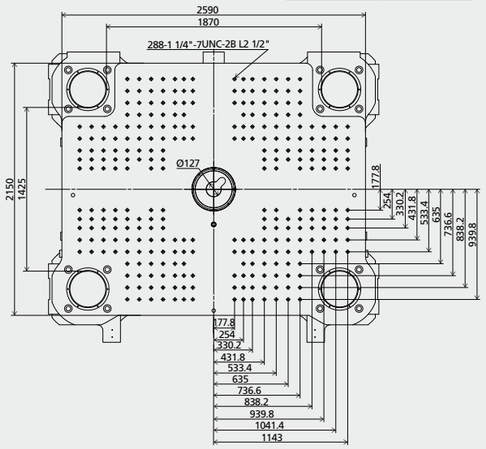

Japanese version

unit: mm

Movable platen

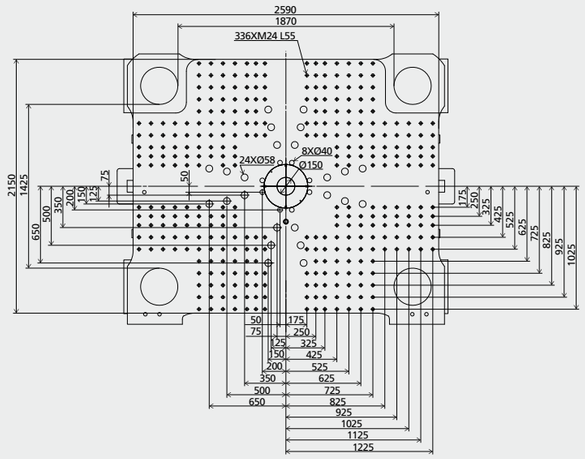

Fixed platen

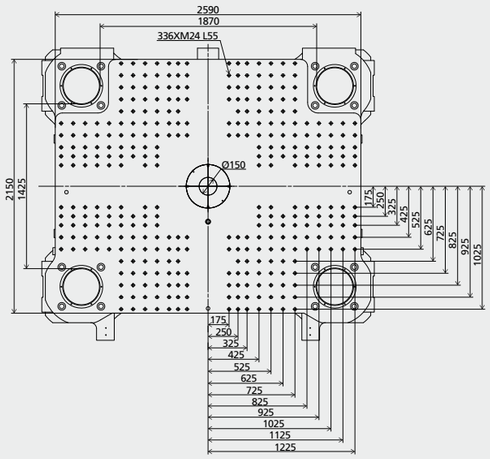

Platen Layout JE21000

European version

unit: mm

Movable platen

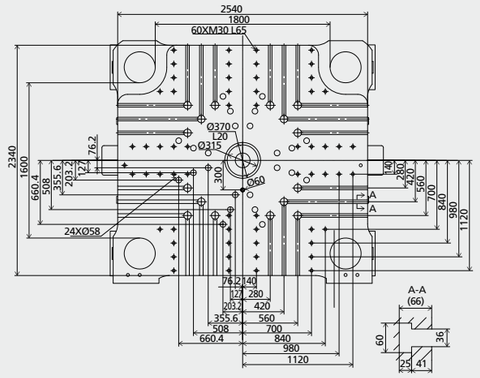

Fixed platen

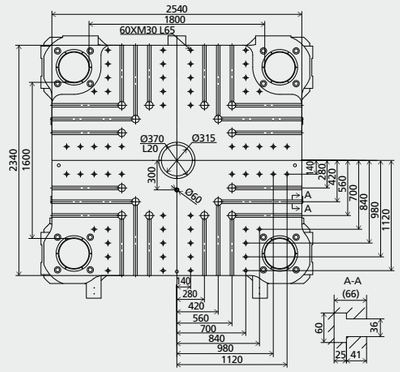

American version

unit: mm

Movable platen

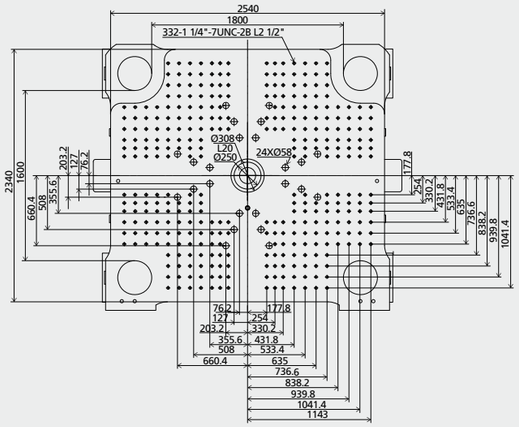

Fixed platen

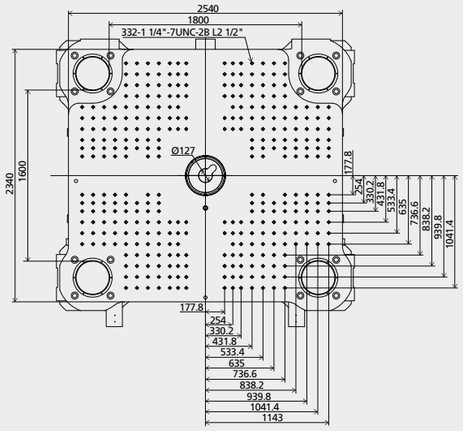

Japanese version

unit: mm

Movable platen

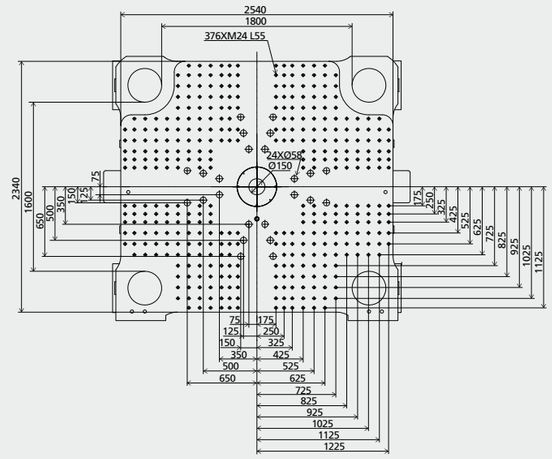

Fixed platen

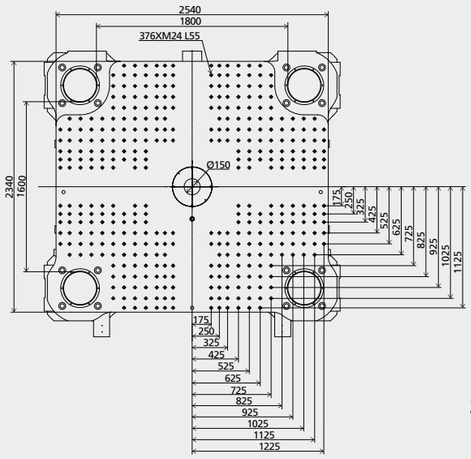

Platen Layout **JE24000**

European version

unit: mm

Movable platen | Fixed platen

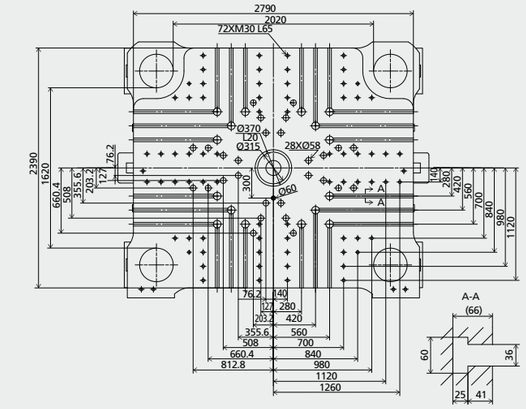

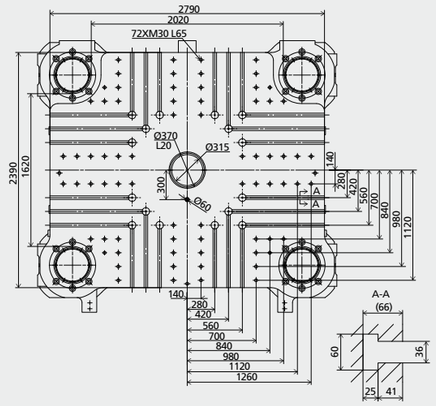

American version

unit: mm

Movable platen | Fixed platen

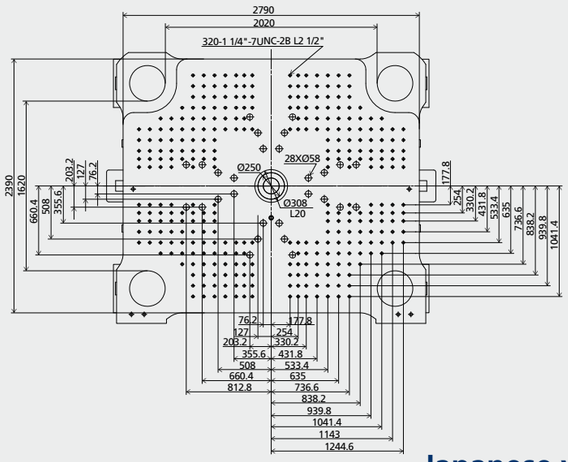

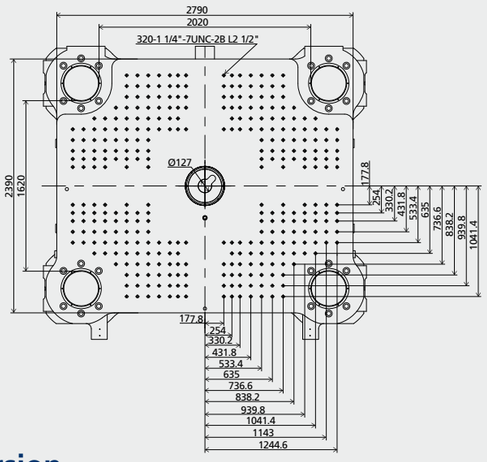

Japanese version

unit: mm

Movable platen | Fixed platen

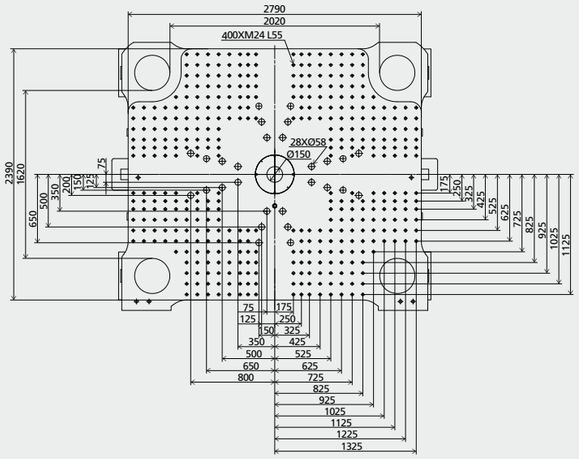

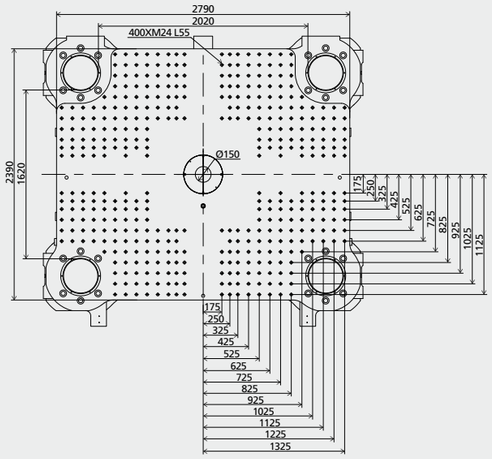

Platen Layout **JE28000**

European version

unit: mm

Movable platen | Fixed platen

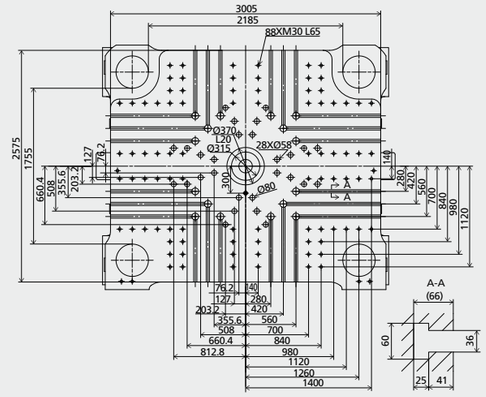

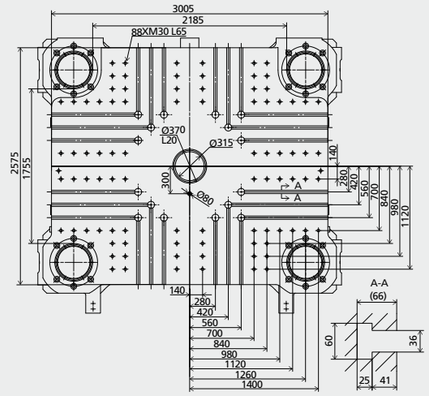

American version

unit: mm

Movable platen | Fixed platen

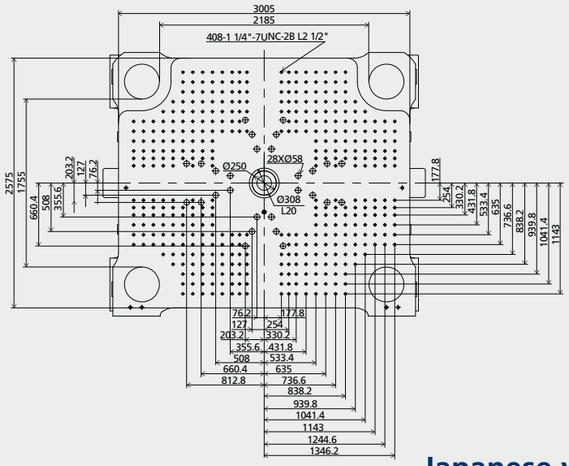

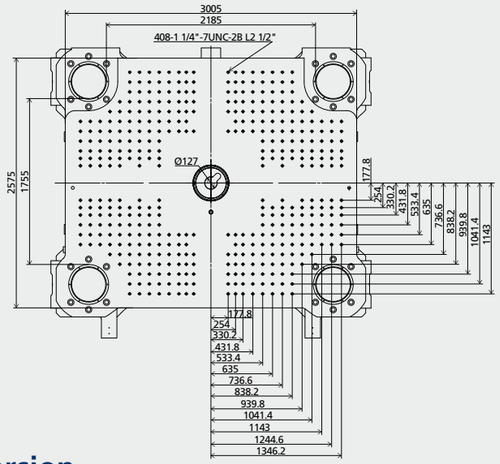

Japanese version

unit: mm

Movable platen | Fixed platen

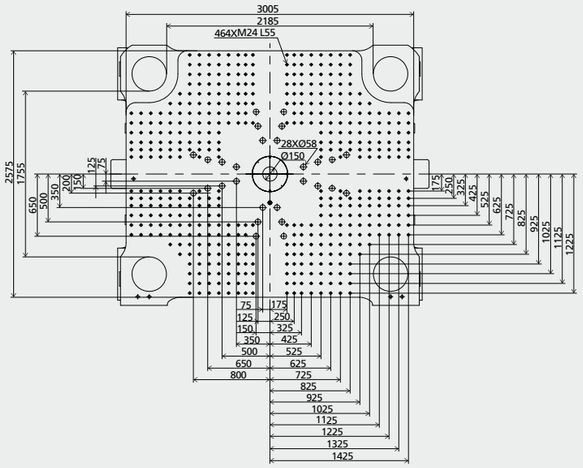

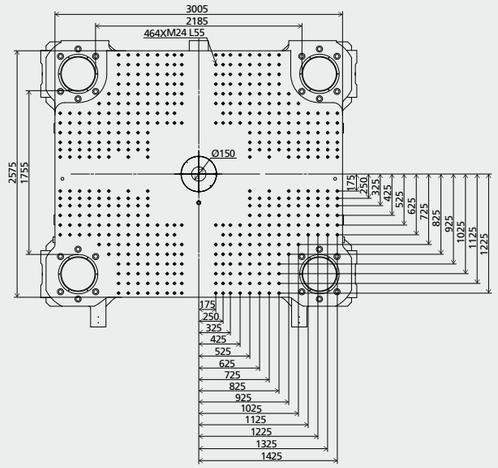

Platen Layout **JE33000**

European version

unit: mm

Movable platen

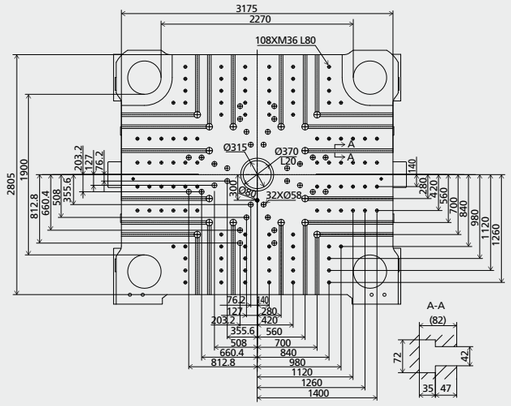

Fixed platen

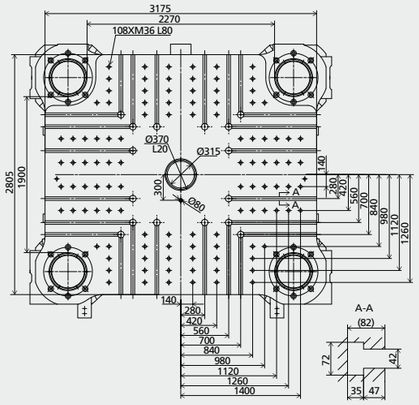

American version

unit: mm

Movable platen

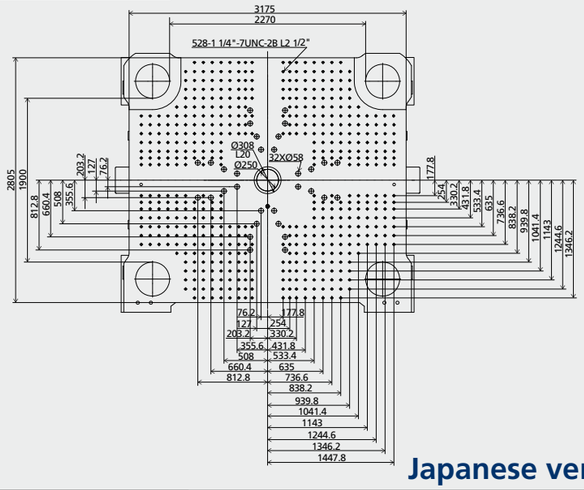

Fixed platen

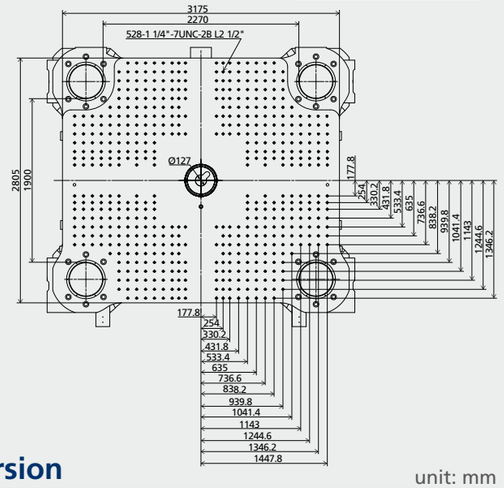

Japanese version

unit: mm

Movable platen

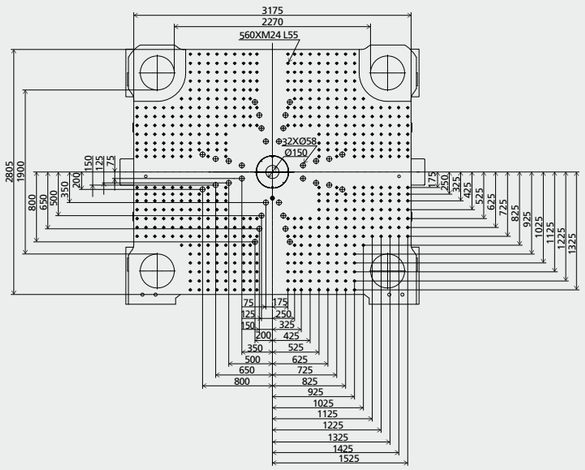

Fixed platen

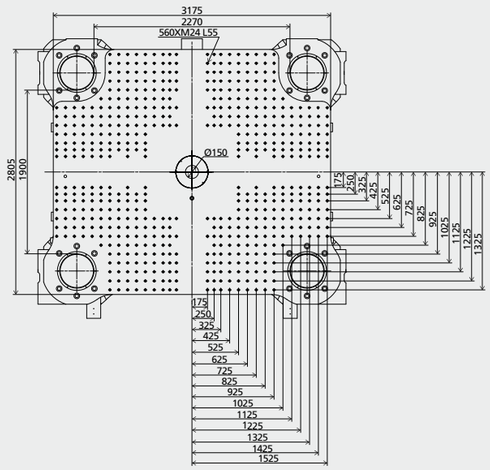

NOTE:

NOTE:

NOTE: